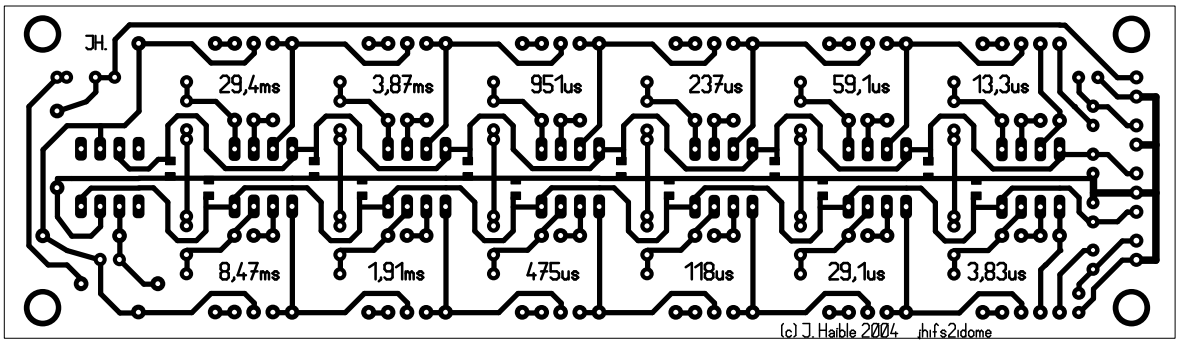
JH.
29,4ms
3,87ms
951us
237us
59,1us
13,3us
8,47ms
1,91ms
475us
118us
29,1us
3,83us
(c) J. Haible 2004 jhifs2idome